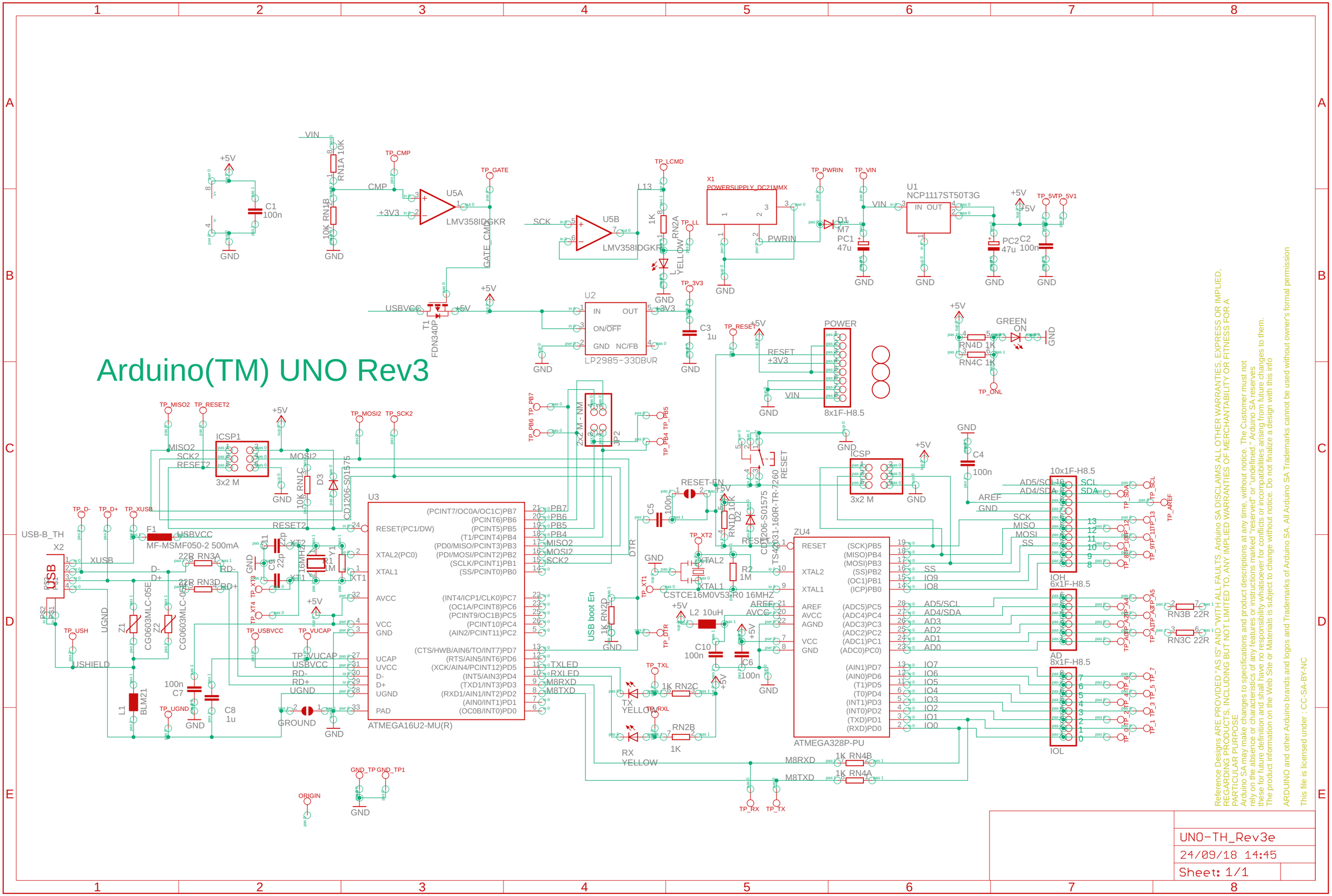
Arduino(TM) UNO Rev3
U5A
LMV358IDGKR
U5B
LMV358IDGKR
U2
LP2985-33DBVR
U1
NCP1117ST50T3G
X1
POWERSUPPLY_DC21MMX
U3
ATMEGA16U2-MU(R)
ZU4
ATMEGA328P-PU
ICSP1
3x2 M
ICSP
3x2 M
POWER
8x1F-H8.5
10x1F-H8.5
6x1F-H8.5
8x1F-H8.5
USB-B_TH
X2
USB
F1
MF-MSMF050-2 500mA
USBVCC
XUSB
D-
D+
RD-
RD+
UGND
USHIELD
GROUND
ORIGIN
GND_TP
GND_TP1
RESET-EN
CD1206-S01575
TS4231-160R-TR-7260
CSTCE16M0V53-R0 16MHZ
L2 10uH
USB boot En
DTR
RESET
TX
YELLOW
RX
YELLOW
GREEN
ON
M8RXD
M8TXD
AREF
GND
SCK
MISO
MOSI
SS
AD5/SCL
AD4/SDA
IOH
IOL
AD
RN3B 22R
RN3C 22R
Reference Designs ARE PROVIDED "AS IS" AND "WITH ALL FAULTS. Arduino SA DISCLAIMS ALL OTHER WARRANTIES, EXPRESS OR IMPLIED, REGARDING PRODUCTS, INCLUDING BUT NOT LIMITED TO, ANY IMPLIED WARRANTIES OF MERCHANTABILITY OR FITNESS FOR A PARTICULAR PURPOSE
Arduino SA may make changes to specifications and product descriptions at any time, without notice. The Customer must not rely on the absence or characteristics of any features or instructions marked "reserved" or "undefined." Arduino SA reserves these for future definition and shall have no responsibility whatsoever for conflicts or incompatibilities arising from future changes to them.
The product information on the Web Site or Materials is subject to change without notice. Do not finalize a design with this info
ARDUINO and other Arduino brands and logos and Trademarks of Arduino SA. All Arduino SA Trademarks cannot be used without owner's formal permission
This file is licensed under : CC-SA-BY-NC
UNO-TH_Rev3e
24/09/18 14:45
Sheet: 1/1